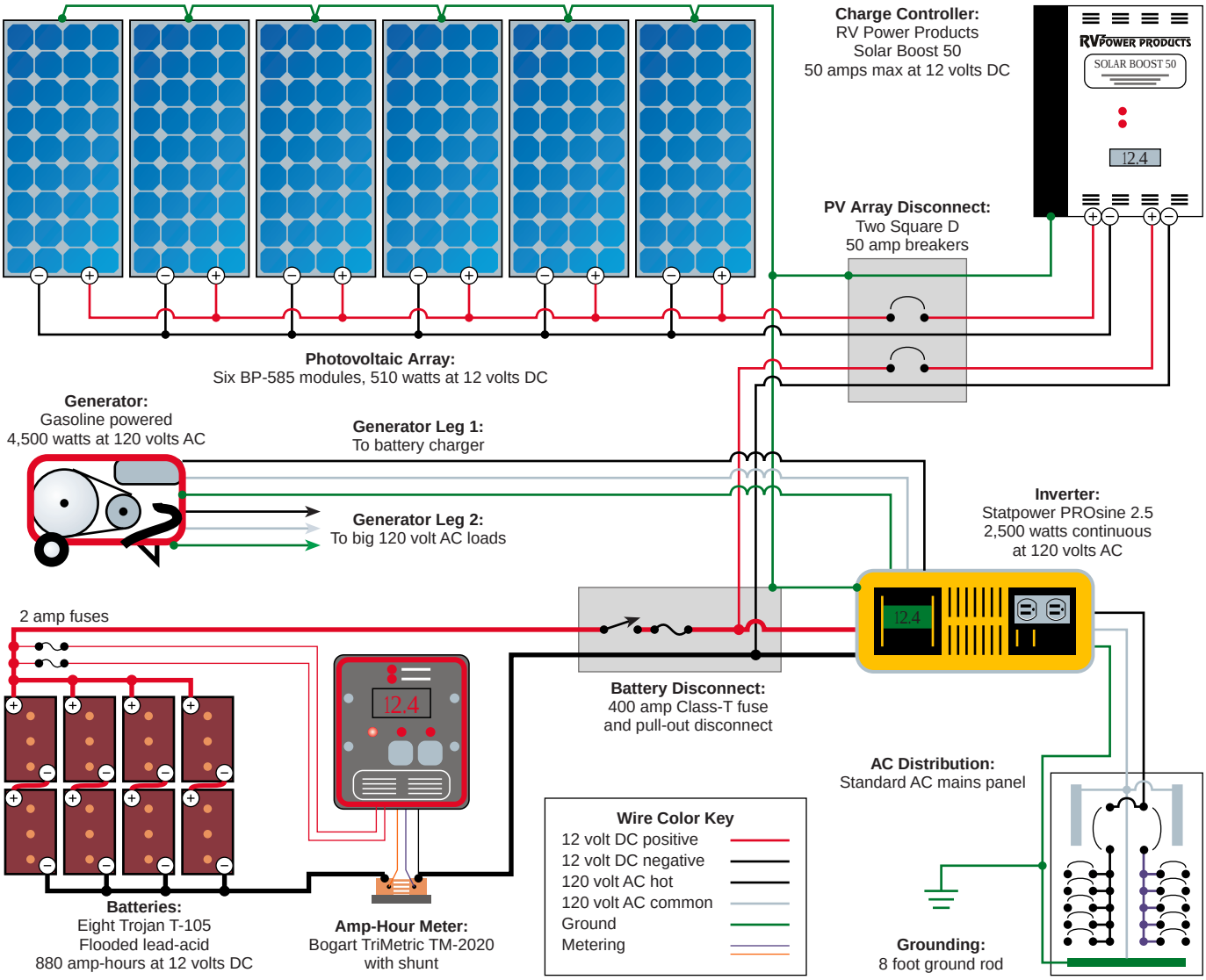
Charge Controller:
RV Power Products
Solar Boost 50
50 amps max at 12 volts DC
RV POWER PRODUCTS
SOLAR BOOST 50
12.4
PV Array Disconnect:
Two Square D
50 amp breakers
Photovoltaic Array:
Six BP-585 modules, 510 watts at 12 volts DC
Generator:
Gasoline powered
4,500 watts at 120 volts AC
Generator Leg 1:
To battery charger
Generator Leg 2:
To big 120 volt AC loads
Inverter:
Statpower PROsine 2.5
2,500 watts continuous
at 120 volts AC
2 amp fuses
12.4
Battery Disconnect:
400 amp Class-T fuse
and pull-out disconnect
AC Distribution:
Standard AC mains panel
Wire Color Key
12 volt DC positive
12 volt DC negative
120 volt AC hot
120 volt AC common
Ground
Metering
Batteries:
Eight Trojan T-105
Flooded lead-acid
880 amp-hours at 12 volts DC
Amp-Hour Meter:
Bogart TriMetric TM-2020
with shunt
Grounding:
8 foot ground rod